VW Passat B5 - skid plate for AT case

Body

VIN:- AT TYPE :26.360

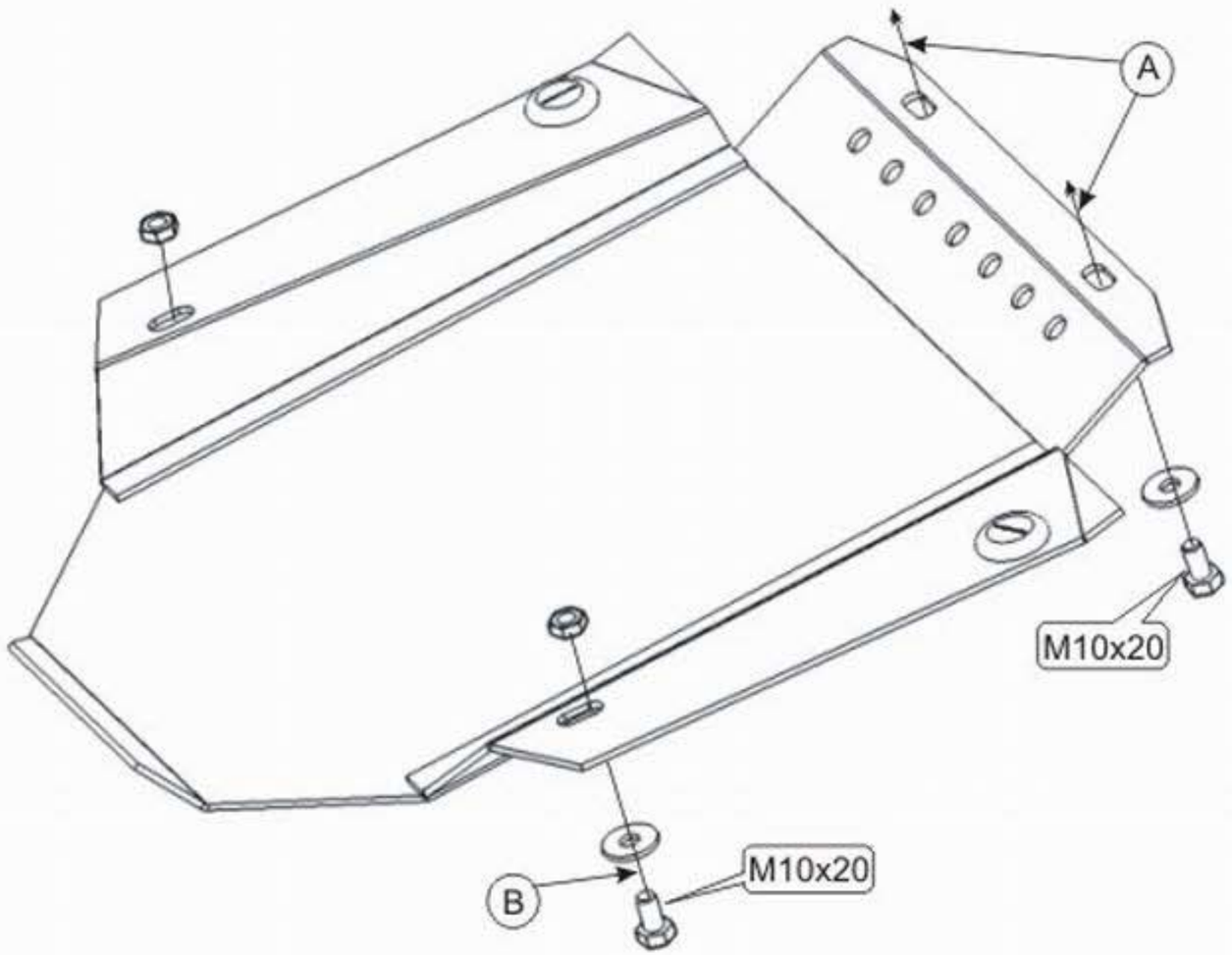

. Mount this skid plate only after the skid plate for engine bay is Installed.

1. Fix the front part of the skid plate to the already mounted skid plate for engine bay -(A).
2. Fix the rear part of the skid plate to car's load bearing elements -(B).
3. Tighten all screw joints

4 x M 10x20

4 x 10

2 x Nut M10