Opel Calibra 4x4

1990 - 1997

TYPE :16.269

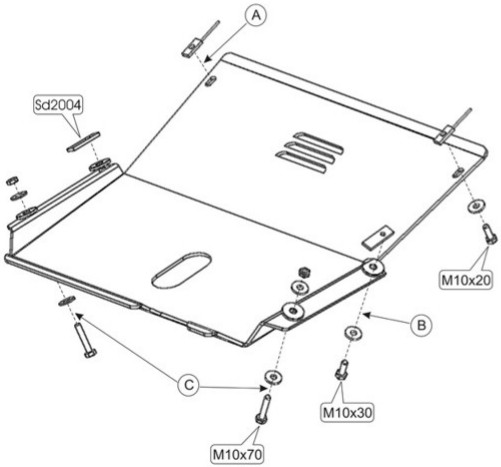

2 x
2 x SD2004 (65x20x20)

2 x M 10x20
2 x M 10x30
2 x M 10x70

8 x 10
4 x SD7001

2 x M10