Nissan Patrol (skid for steering rods)

Body: Years.:2000-; V: 3,0;

VIN:- JN1TESY61U00000 TYPE :15.607

With stainless steel cover- TYPE :15.532

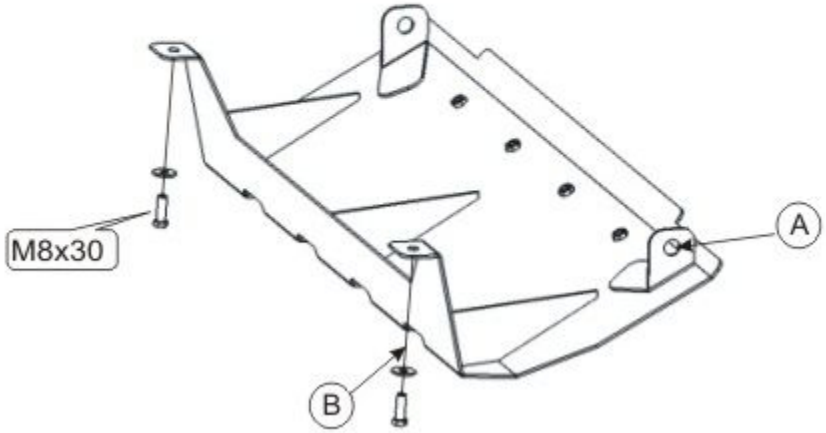

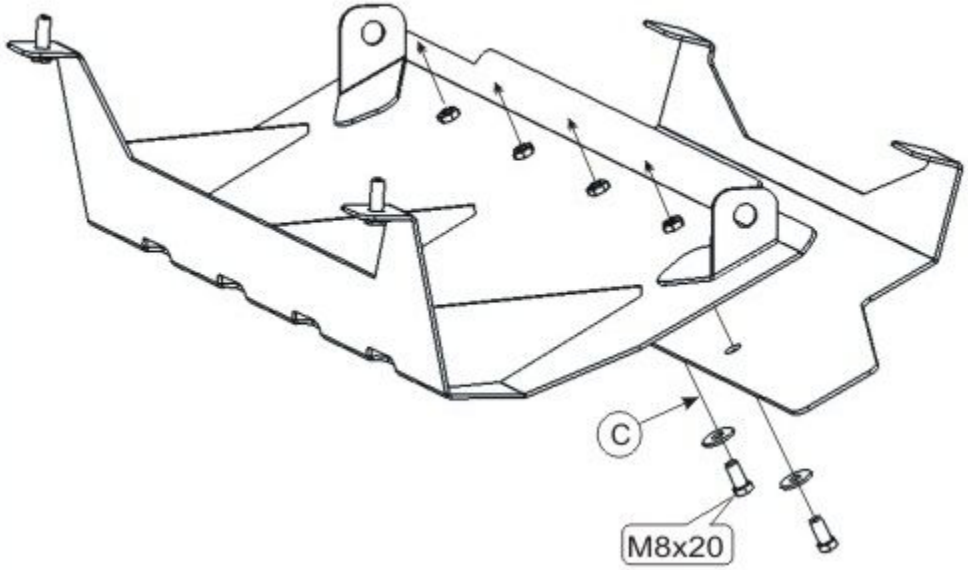

1. Remove towing hook before mounting the skid plate.
2. Remove regular dust guard.
3. Loosen the two bolts fastening bumper's corbel to the car frame.
4. Put corbels "A" under the loosened bolts and fix them.
5. Fix the skid plate in points "B" to regular apertures in the car frame with bolts M 8x30.
6 Tighten all screw joints.
7. Also it is possible to mount additionally a cover over the bumper by fixing it to the skid plate with bolts M 8x20 -(C).

4 x M 8x20
2 x M 8x30

6 x 8