Citroen Jumper

VIN:-

TYPE :05.446

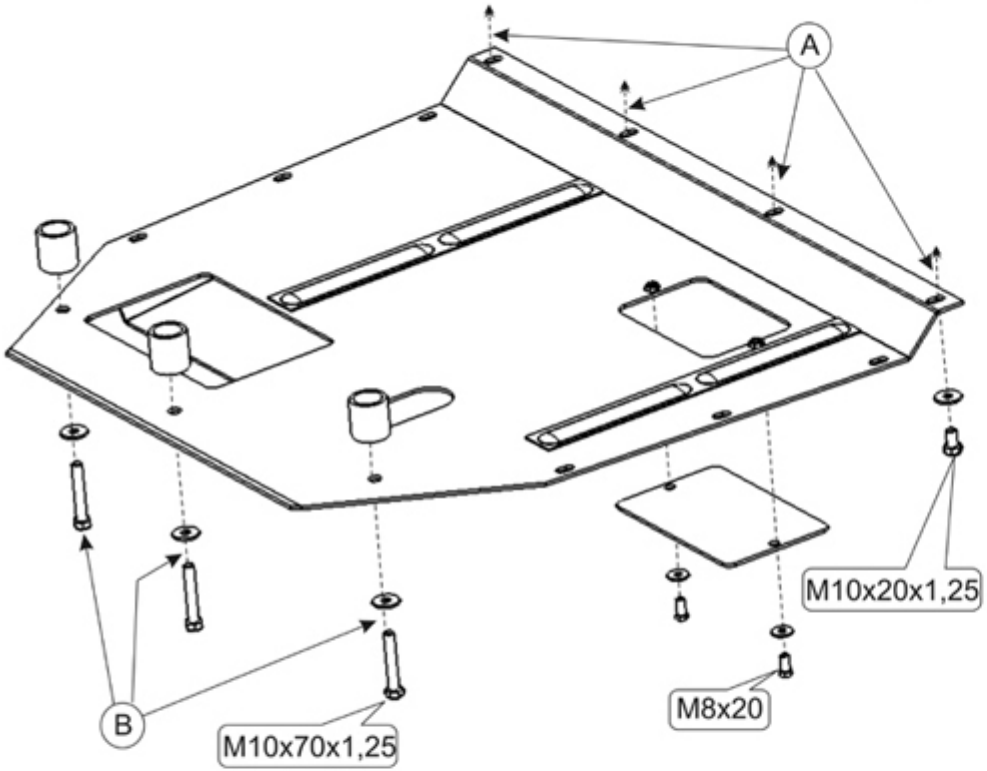

1.
2.
3.

4.

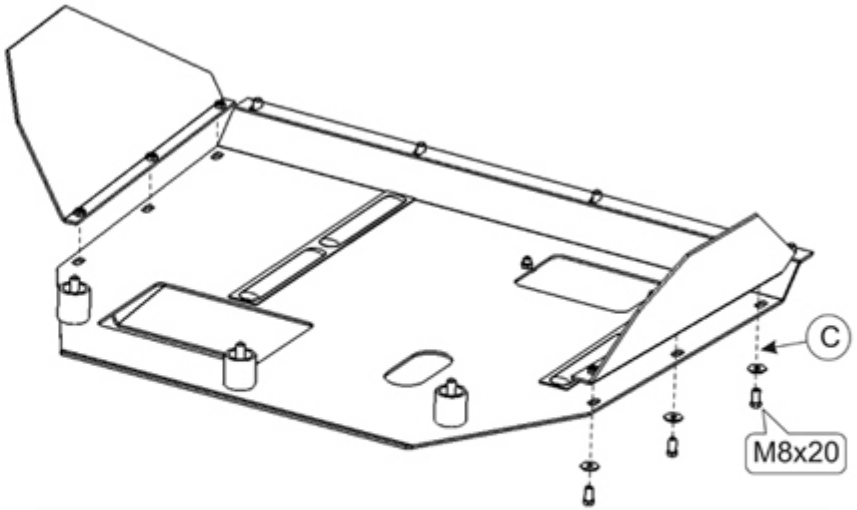

5.
6.

8 x M 8x20
4 x M10x20x1,25
3 x M10x70x1,25

8 x 8
7 x 10