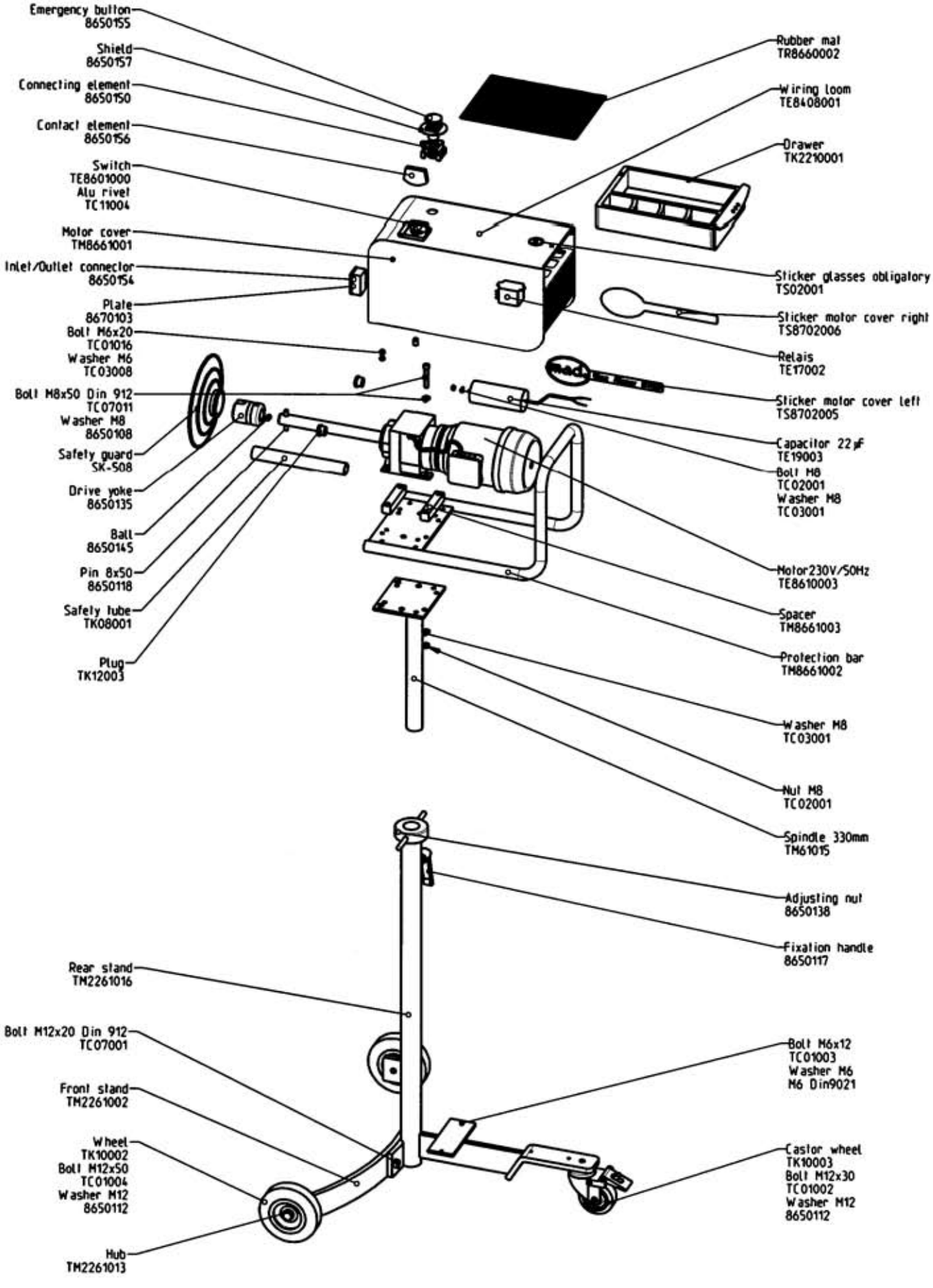
Emergency button
8650155
Shield
8650157
Connecting element
8650150
Contact element
8650156
Switch
TE8601000
Alu rivet
TC11004
Motor cover
TM8661001
Inlet/Outlet connector
8650154
Plate
8670103
Bolt M6x20
TC01016
Washer M6
TC03008
Bolt M8x50 Din 912
TC07011
Washer M8
8650108
Safety guard
SK-508
Drive yoke
8650135
Ball
8650145
Pin 8x50
8650118
Safety tube
TK08001
Plug
TK12003
Rubber mat
TR8660002
Wiring loom
TE8408001
Drawer
TK2210001
Sticker glasses obligatory
TS02001
Sticker motor cover right
TS8702006
Relais
TE17002
Sticker motor cover left
TS8702005
Capacitor 22µF
TE19003
Bolt M8
TC02001
Washer M8
TC03001
Motor230V/50Hz
TE8610003
Spacer
TM8661003
Protection bar
TM8661002
Washer M8
TC03001
Nut M8
TC02001
Spindle 330mm
TM61015
Adjusting nut
8650138
Fixation handle
8650117
Rear stand
TM2261016
Bolt M12x20 Din 912
TC07001
Front stand
TM2261002
Wheel
TK10002
Bolt M12x50
TC01004
Washer M12
8650112
Hub
TM2261013
Bolt M6x12
TC01003
Washer M6
M6 Din9021
Castor wheel
TK10003
Bolt M12x30
TC01002
Washer M12
8650112